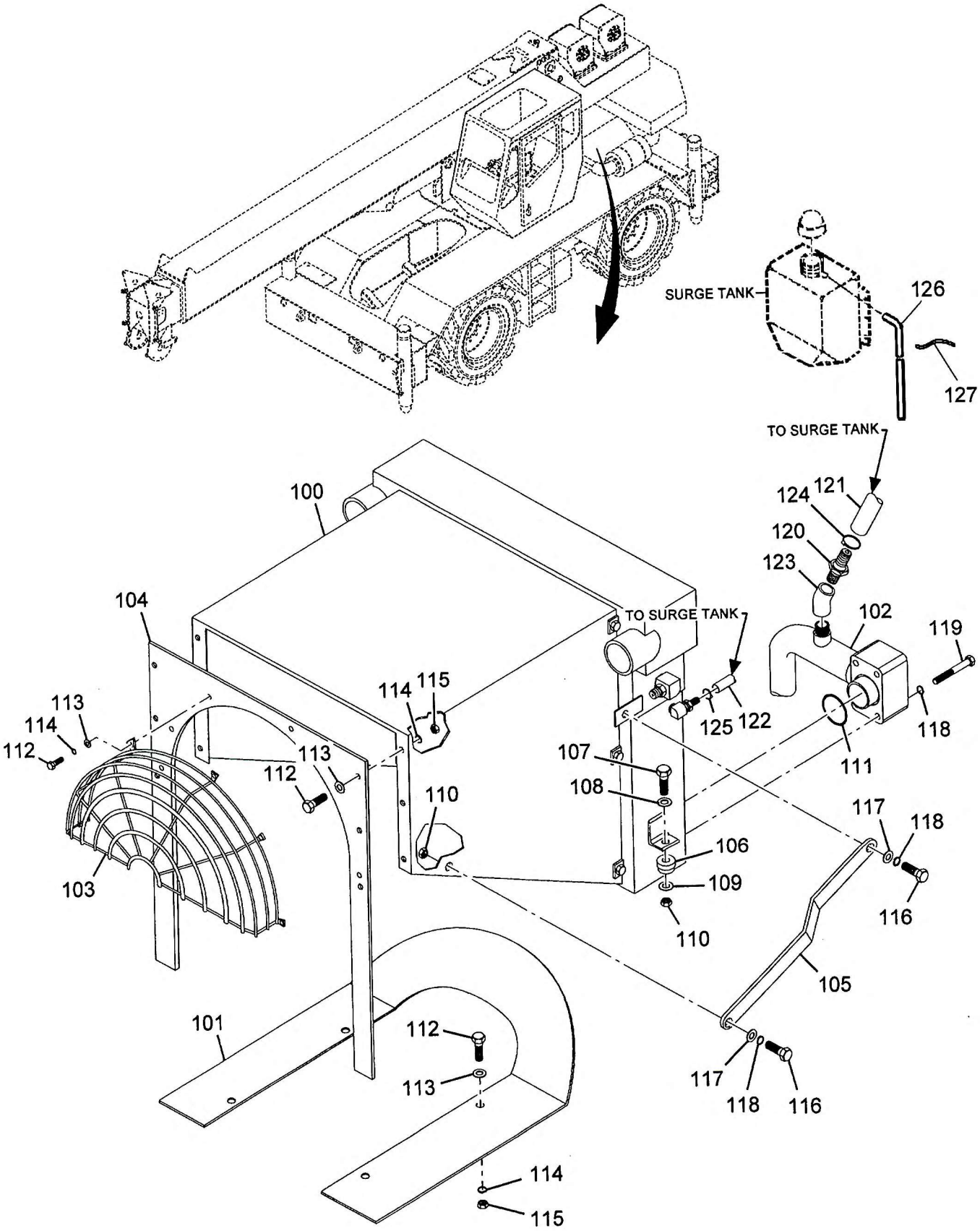

2165810066

(SHEET 1 OF 1)